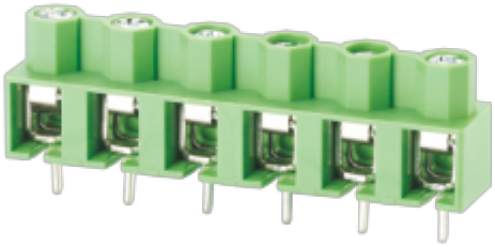

# NB166-7.5-XXP

螺钉式接线端子

额定电流:15 A

额定电压: 300 V

间距: 7.5 mm

使用线径: 26~14 AWG

极数: 2P~24P

安装: 波峰焊

尺寸图

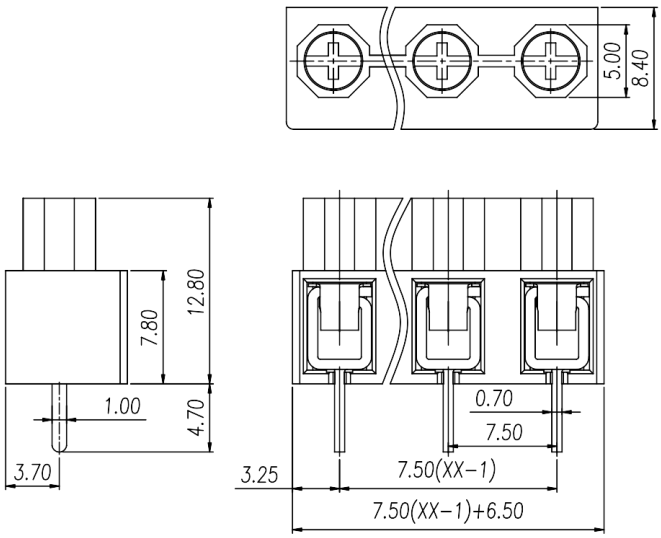


PCB开孔图

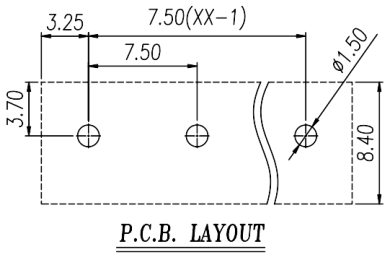


仅供参考，实际规格依产品工程图为准 版本2.0

**技术数据**-UL/CUL

| | | | |
|---|---|---|---|
| 等级 Use Group | B | C | D |
| 额定电压 Rate Voltage | 300V | - | 300V |
| 额定电流 Rated Current | 15A | - | 10A |
| 接线范围 Wire Range | | 26~14AWG | |
| 耐电压 Dielectric Voltage-Withstand | | 1.6KV | |

**技术参数**-IEC

| | | | |
|---|---|---|---|
| 过电压类别 Overvoltage Category | III | III | II |
| 污染等级 Contamination Class | 3 | 2 | 2 |
| 额定电压 Rated Voltage | 450V | 630V | 1000V |
| 额定电流 Rated Current | 24A | 24A | 24A |
| 额定冲击电压 Impulse withstand voltage | 6.0KV | 6.0KV | 6.0KV |
| 导线截面积[硬/柔] Conductor cross section | | 0.5~2.5mm $^2$ | |

**材料** Material

| | |
|---|---|
| 绝缘材料 Insulation Material | PA66 |
| 阻燃等级 Flame relardant rating | UL94V-0 |
| 导体材料 Conductor Material | Copper alloy |
| 导体表面镀层 Plating of conductor surface | Sn plated |

**一般参数** Other Data

| | |
|---|---|
| 间距 Pitch | 7.5 mm |

| | |
|---|---|
| 极数 Poles | 2P~24P |
| 剥线长度 Stripping Length | 5~6mm |
| 螺丝 Screw | M3 |
| 扭矩 Torque | 0.5N.m |
| 工作温度 Operating temperature | -40~+105°C |
| 焊锡温度 Soldering temperature | 260°C/5S |
| 引针尺寸 Pin dimensions | 0.7X1.0 |
| PCB板孔径 PCB Hole Diameter | Ø1.5 |

**商业数据**

| | | | |
|---|---|---|---|
| 产品型号 | NB166-7.5-XXP | | |
| 产品编号 | - | | |
| 包装方式 | 内袋 | 内盒 | 外箱 |

宁波佳绩机电科技有限公司
佳绩电子科技（宁波）有限公司
地址：宁波市海曙区高桥镇新港路8号
邮编：315000
总机：+86 574-55665696
传真：+86 574-55842261
邮箱：shangwu@nbjiaji.com

Ningbo jiaji Electronics Co.,Ltd
Address: No. 8 Xingang Road, Gaoqiao Town, Haishu District, Ningbo City, Zhejiang Province
Zip code: 315000
Switchboard: +86 574-55665696
Fax: +86 574-55842261
E-mail：shangwu@nbjiaji.com